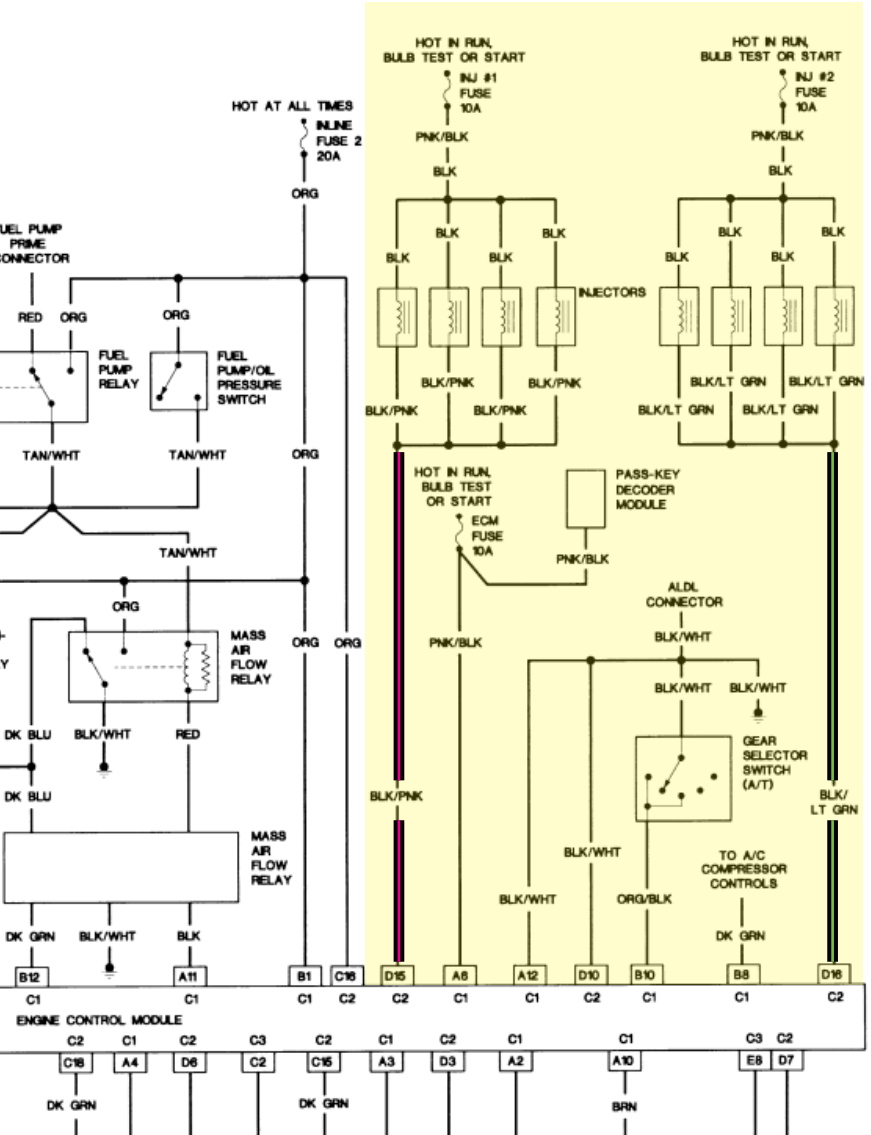
HOT AT ALL TIMES
INLINE FUSE 2 20A
ORG
UEL PUMP PRIME CONNECTOR
RED
ORG
ORG
FUEL PUMP RELAY
FUEL PUMP/OIL PRESSURE SWITCH
TAN/WHT
TAN/WHT
ORG
TAN/WHT
ORG
MASS AIR FLOW RELAY
ORG
ORG
DK BLU
BLK/WHT
RED
DK BLU
MASS AIR FLOW RELAY
DK GRN
BLK/WHT
BLK
HOT IN RUN, BULB TEST OR START
INJ #1 FUSE 10A
PNK/BLK
BLK
BLK
BLK
BLK
BLK
INJECTORS
BLK/PNK
BLK/PNK
BLK/PNK
BLK/PNK
HOT IN RUN, BULB TEST OR START
INJ #2 FUSE 10A
PNK/BLK
BLK
BLK
BLK
BLK
BLK
BLK
BLK/LT GRN
BLK/LT GRN
BLK/LT GRN
BLK/LT GRN
HOT IN RUN, BULB TEST OR START
ECM FUSE 10A
PASS-KEY DECODER MODULE
PNK/BLK
PNK/BLK
ALDL CONNECTOR
BLK/WHT
BLK/WHT
BLK/WHT
GEAR SELECTOR SWITCH (A/T)
BLK/PNK
BLK/ LT GRN
BLK/WHT
BLK/WHT
ORG/BLK
TO A/C COMPRESSOR CONTROLS
DK GRN
B12
A11
B1
C16
D15
A6
A12
D10
B10
B8
D16
C1
C1
C1
C2
C2
C1
C1
C2
C1
C1
C1
C2
ENGINE CONTROL MODULE
C2
C1
C2
C3
C2
C1
C2
C1
C1
C3
C2
C18
A4
D6
C2
C16
A3
D3
A2
A10
E8
D7
DK GRN
DK GRN
BRN