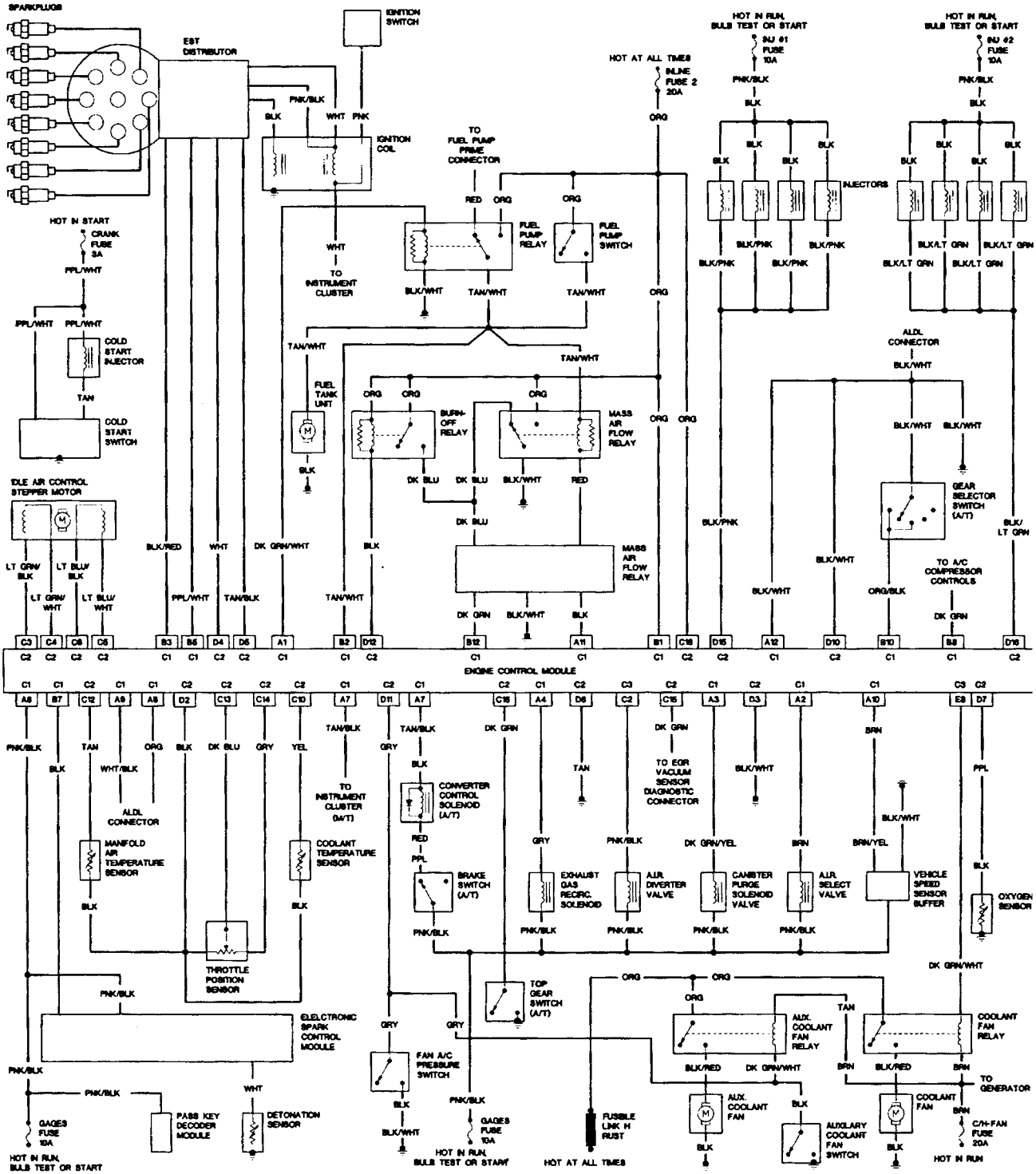
SPARKPLUGS
EST DISTRIBUTOR
IGNITION SWITCH
IGNITION COIL
HOT IN RUN, BULB TEST OR START
INJ #1 FUSE 10A
INJ #2 FUSE 10A
HOT AT ALL TIMES
INLINE FUSE 2 20A
INJECTORS
TO FUEL PUMP PRIME CONNECTOR
FUEL PUMP RELAY
FUEL PUMP SWITCH
HOT IN START
CRANK FUSE 3A
TO INSTRUMENT CLUSTER
COLD START INJECTOR
COLD START SWITCH
ALDL CONNECTOR
FUEL TANK UNIT
BURN-OFF RELAY
MASS AIR FLOW RELAY
IDLE AIR CONTROL STEPPER MOTOR
GEAR SELECTOR SWITCH (A/T)
TO A/C COMPRESSOR CONTROLS
ENGINE CONTROL MODULE
CONVERTER CONTROL SOLENOID (A/T)
TO INSTRUMENT CLUSTER (M/T)
TO EGR VACUUM SENSOR DIAGNOSTIC CONNECTOR
MANIFOLD AIR TEMPERATURE SENSOR
COOLANT TEMPERATURE SENSOR
BRAKE SWITCH (A/T)
EXHAUST GAS RECIRC. SOLENOID
A.I.R. DIVERTER VALVE
CANISTER PURGE SOLENOID VALVE
A.I.R. SELECT VALVE
VEHICLE SPEED SENSOR BUFFER
OXYGEN SENSOR
THROTTLE POSITION SENSOR
TCP GEAR SWITCH (A/T)
ELECTRONIC SPARK CONTROL MODULE
FAN A/C PRESSURE SWITCH
AUX. COOLANT FAN RELAY
COOLANT FAN RELAY
TO GENERATOR
AUX. COOLANT FAN
AUXILARY COOLANT FAN SWITCH
COOLANT FAN
C/H-FAN FUSE 20A
HOT IN RUN
GAGES FUSE 10A
HOT IN RUN, BULB TEST OR START
PASS KEY DECODER MODULE
DETONATION SENSOR
FUSIBLE LINK IN RUST
HOT AT ALL TIMES