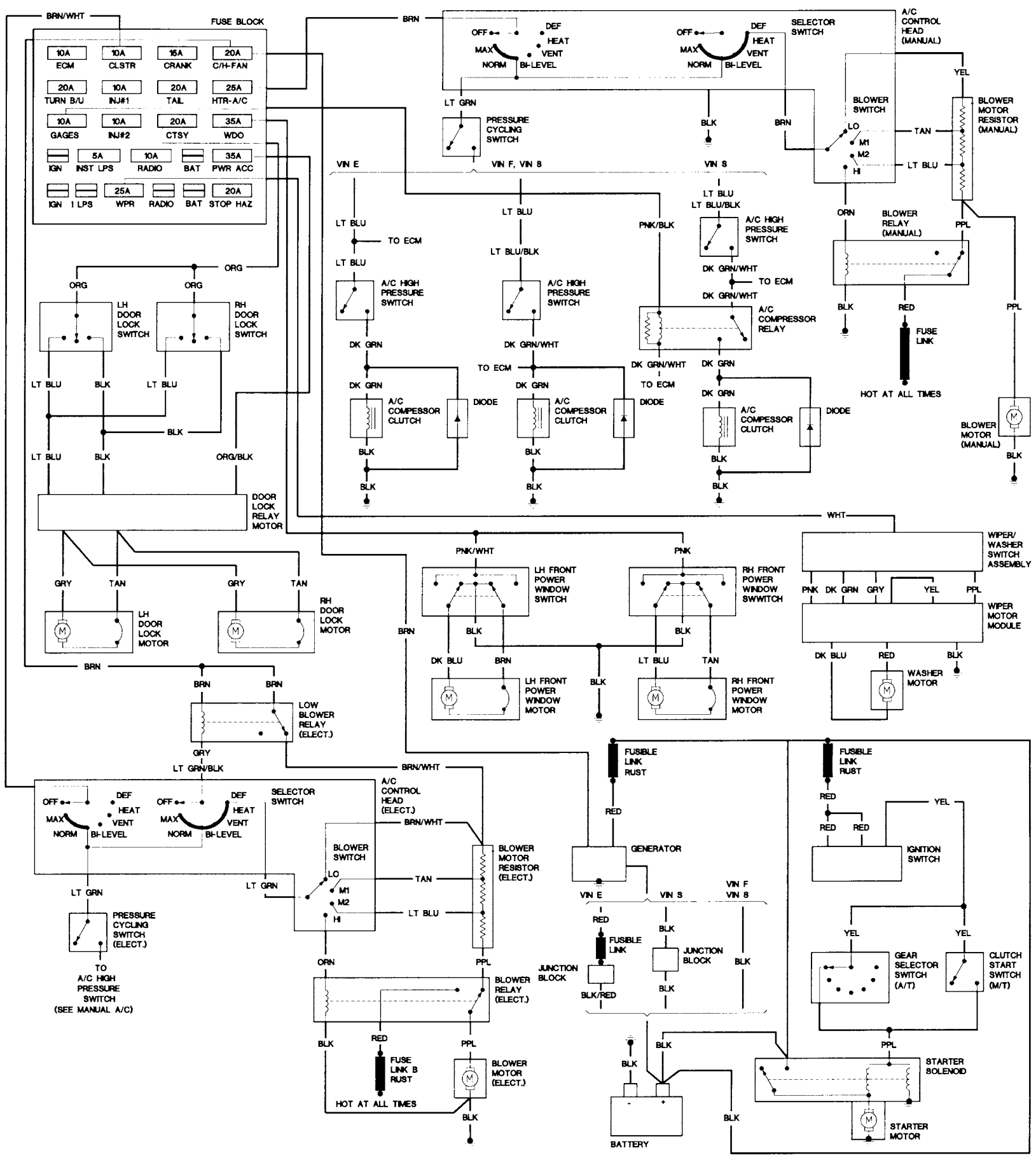
FUSE BLOCK
10A ECM
10A CLSTR
15A CRANK
20A C/H-FAN
20A TURN B/U
10A INJ#1
20A TAIL
25A HTR-A/C
10A GAGES
10A INJ#2
20A CTSY
35A WDO
IGN
5A INST LPS
10A RADIO
BAT
35A PWR ACC
IGN
I LPS
25A WPR
RADIO
BAT
20A STOP HAZ
A/C CONTROL HEAD (MANUAL)
SELECTOR SWITCH
OFF
DEF
HEAT
VENT
MAX
NORM
BI-LEVEL
PRESSURE CYCLING SWITCH
BLOWER SWITCH
LO
M1
M2
HI
BLOWER MOTOR RESISTOR (MANUAL)
BLOWER RELAY (MANUAL)
FUSE LINK
HOT AT ALL TIMES
BLOWER MOTOR (MANUAL)
VIN E
VIN F, VIN 8
VIN S
TO ECM
A/C HIGH PRESSURE SWITCH
A/C COMPRESSOR RELAY
A/C COMPESSOR CLUTCH
DIODE
LH DOOR LOCK SWITCH
RH DOOR LOCK SWITCH
DOOR LOCK RELAY MOTOR
LH DOOR LOCK MOTOR
RH DOOR LOCK MOTOR
LH FRONT POWER WINDOW SWITCH
RH FRONT POWER WINDOW SWWITCH
LH FRONT POWER WINDOW MOTOR
RH FRONT POWER WINDOW MOTOR
WIPER/ WASHER SWITCH ASSEMBLY
WIPER MOTOR MODULE
WASHER MOTOR
LOW BLOWER RELAY (ELECT.)
A/C CONTROL HEAD (ELECT.)
BLOWER MOTOR RESISTOR (ELECT.)
BLOWER RELAY (ELECT.)
FUSE LINK B RUST
BLOWER MOTOR (ELECT.)
PRESSURE CYCLING SWITCH (ELECT.)
TO A/C HIGH PRESSURE SWITCH (SEE MANUAL A/C)
FUSIBLE LINK RUST
GENERATOR
FUSIBLE LINK
JUNCTION BLOCK
BATTERY
IGNITION SWITCH
GEAR SELECTOR SWITCH (A/T)
CLUTCH START SWITCH (M/T)
STARTER SOLENOID
STARTER MOTOR