General Motors Corporation
CHEVROLET MOTOR DIVISION

PRODUCT DESCRIPTION MANUAL

☐ ITEM REFERENCE ◇ PROCESS MATERIAL △ TORQUE ◪ EXISTING AS PART OF

(1)

14039437	1	ENGINE MOUNT ASM &LB9/LG4/L69
14039405	1	&LB8
11502812	2	NUT
+ 14089455-6	3	PLATE ASM L & RH
+ 14089454	4	PLATE ASM

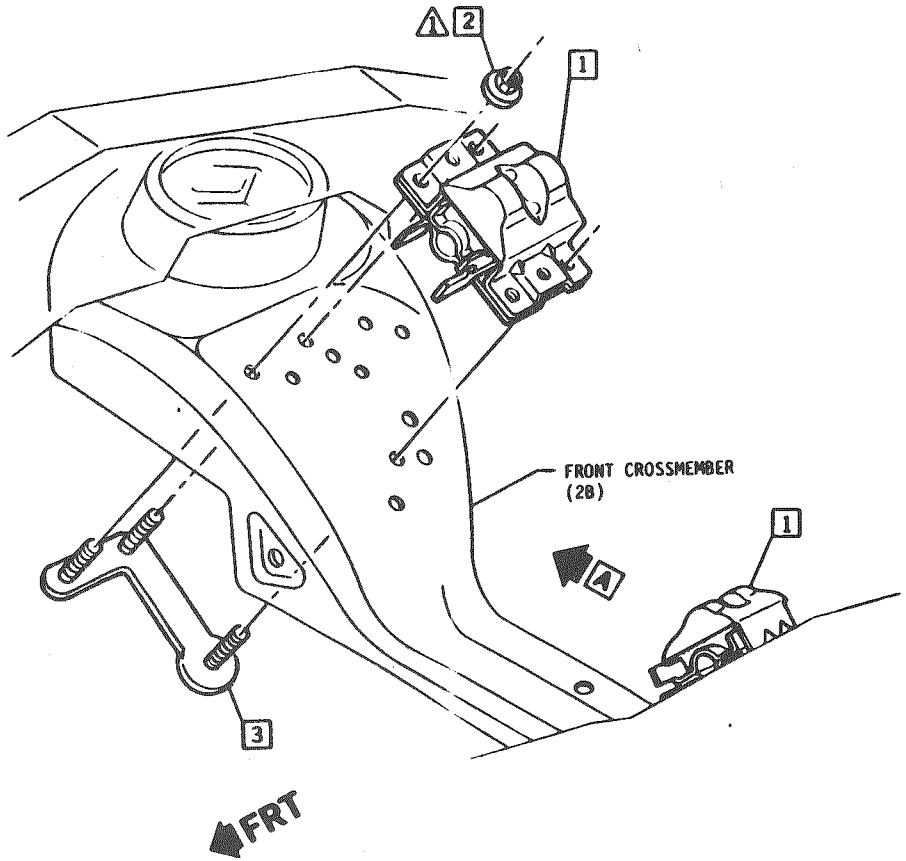

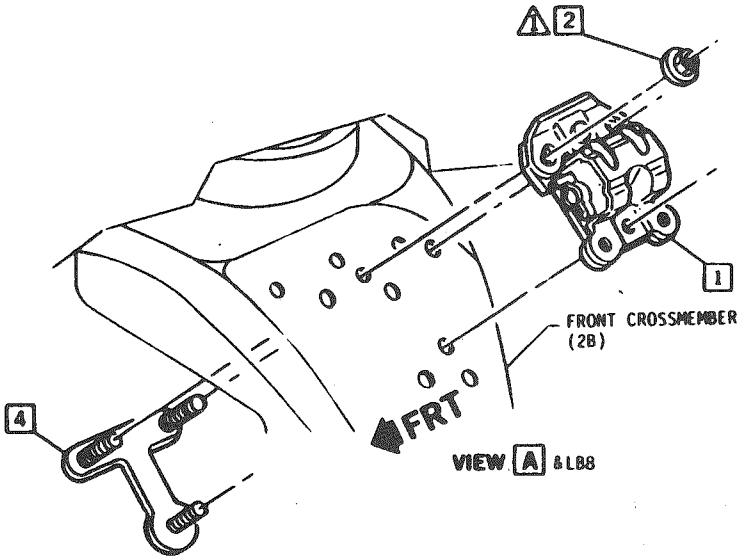

DATE	SYM	REVISION	AUTH	DR	CK	APPR	
24APR5	1	OPTION LG9 ADDED - 2 PL. 1 - 5	A. SIM	RK	AM		

DATE 01NOR4
DR R KOCH
CK A.M. Blumm AM
APPR S

DIV CHEVROLET

1986 F PASSENGER 14089402

TITLE ENGINE MOUNTS
FA00 &LB8/LB9/LG4/L69 (1)

DEV ECA 41600
C/O 190C84

11-23994 (S)
11-25740 (S)

UPC 6Q

SHEET C3

△ 34-48

△ FULLY DRIVEN, SEATED & NOT STRIPPED

C ☒ D ☐ O ☐ P ☒ Co ☐