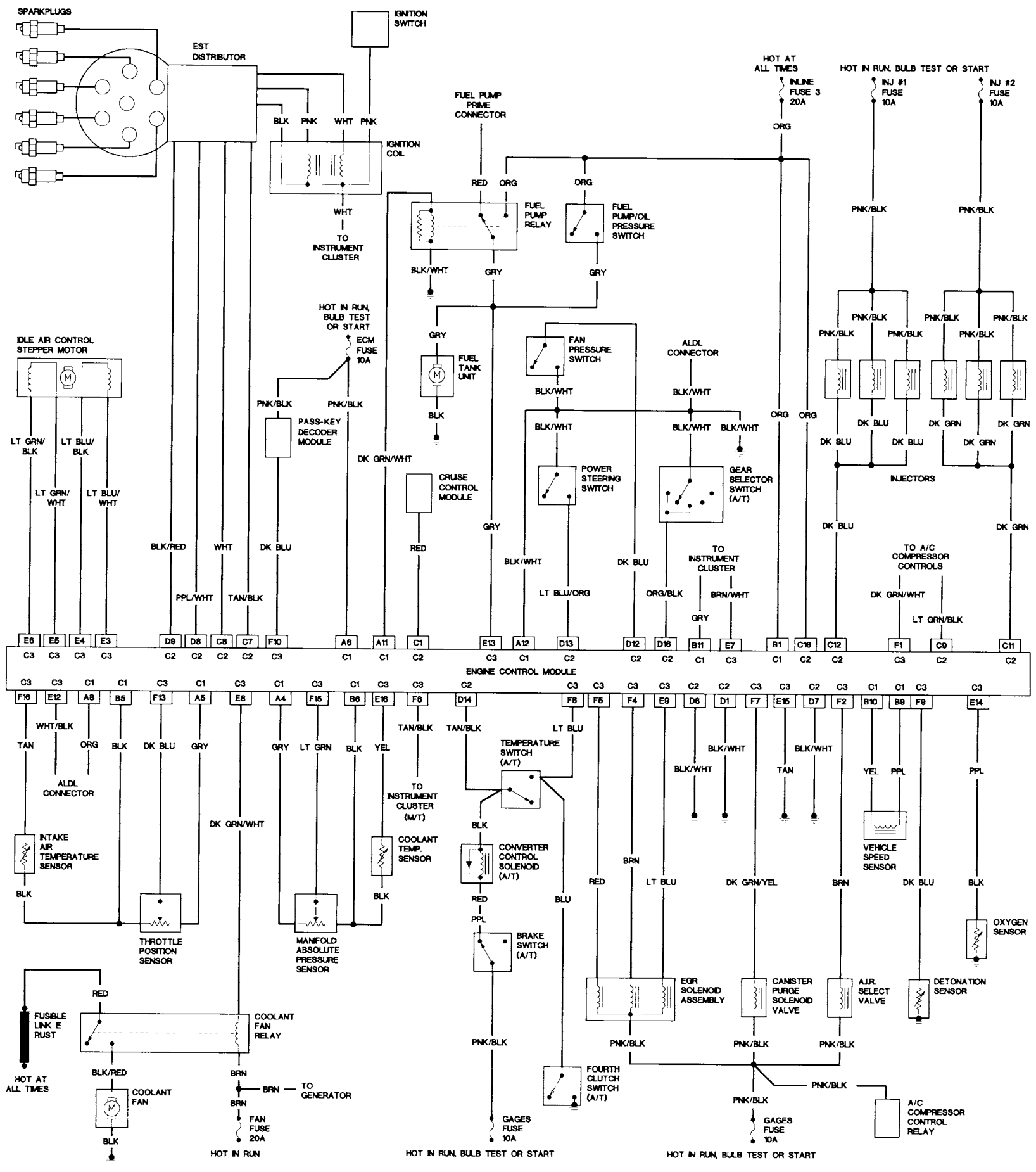
SPARKPLUGS
EST DISTRIBUTOR
IGNITION SWITCH
BLK
PNK
WHT
PNK
IGNITION COIL
WHT
TO INSTRUMENT CLUSTER
FUEL PUMP PRIME CONNECTOR
RED
ORG
ORG
FUEL PUMP RELAY
FUEL PUMP/OIL PRESSURE SWITCH
BLK/WHT
GRY
GRY
HOT AT ALL TIMES
INLINE FUSE 3 20A
ORG
HOT IN RUN, BULB TEST OR START
INJ #1 FUSE 10A
INJ #2 FUSE 10A
PNK/BLK
PNK/BLK
HOT IN RUN, BULB TEST OR START
ECM FUSE 10A
IDLE AIR CONTROL STEPPER MOTOR
GRY
FUEL TANK UNIT
BLK
FAN PRESSURE SWITCH
BLK/WHT
ALDL CONNECTOR
BLK/WHT
PNK/BLK
PNK/BLK
PNK/BLK
PNK/BLK
PNK/BLK
PNK/BLK
PNK/BLK
PASS-KEY DECODER MODULE
LT GRN/BLK
LT BLU/BLK
LT GRN/WHT
LT BLU/WHT
DK GRN/WHT
CRUISE CONTROL MODULE
BLK/WHT
BLK/WHT
BLK/WHT
ORG
ORG
DK BLU
DK BLU
DK BLU
DK GRN
DK GRN
DK GRN
INJECTORS
POWER STEERING SWITCH
GEAR SELECTOR SWITCH (A/T)
GRY
BLK/RED
WHT
DK BLU
RED
BLK/WHT
DK BLU
TO INSTRUMENT CLUSTER
TO A/C COMPRESSOR CONTROLS
DK BLU
DK GRN
PPL/WHT
TAN/BLK
LT BLU/ORG
ORG/BLK
BRN/WHT
DK GRN/WHT
GRY
LT GRN/BLK
E8 E5 E4 E3 D9 D8 C8 C7 F10 A6 A11 C1 E13 A12 D13 D12 D16 B11 E7 B1 C16 C12 F1 C9 C11
C3 C3 C3 C3 C2 C2 C2 C2 C3 C1 C1 C2 C3 C1 C2 C2 C2 C1 C3 C1 C2 C2 C3 C2 C2
ENGINE CONTROL MODULE
C3 C3 C1 C1 C3 C1 C3 C1 C3 C1 C3 C3 C2 C3 C3 C3 C3 C2 C2 C3 C3 C2 C3 C1 C1 C3 C3
F16 E12 A8 B5 F13 A5 E8 A4 F15 B6 E16 F6 D14 F8 F5 F4 E9 D6 D1 F7 E15 D7 F2 B10 B9 F9 E14
TAN
WHT/BLK
ORG
BLK
DK BLU
GRY
GRY
LT GRN
BLK
YEL
TAN/BLK
TAN/BLK
LT BLU
TEMPERATURE SWITCH (A/T)
BLK/WHT
BLK/WHT
BLK/WHT
TAN
YEL
PPL
PPL
ALDL CONNECTOR
TO INSTRUMENT CLUSTER (M/T)
DK GRN/WHT
BLK
INTAKE AIR TEMPERATURE SENSOR
COOLANT TEMP. SENSOR
CONVERTER CONTROL SOLENOID (A/T)
BRN
VEHICLE SPEED SENSOR
BLK
BLK
RED
BLU
RED
LT BLU
DK GRN/YEL
BRN
DK BLU
BLK
THROTTLE POSITION SENSOR
MANIFOLD ABSOLUTE PRESSURE SENSOR
PPL
BRAKE SWITCH (A/T)
OXYGEN SENSOR
RED
FUSIBLE LINK E RUST
COOLANT FAN RELAY
EGR SOLENOID ASSEMBLY
CANISTER PURGE SOLENOID VALVE
A.I.R. SELECT VALVE
DETONATION SENSOR
PNK/BLK
PNK/BLK
PNK/BLK
PNK/BLK
HOT AT ALL TIMES
BLK/RED
BRN
BRN
TO GENERATOR
COOLANT FAN
BRN
FOURTH CLUTCH SWITCH (A/T)
PNK/BLK
PNK/BLK
A/C COMPRESSOR CONTROL RELAY
BLK
FAN FUSE 20A
GAGES FUSE 10A
GAGES FUSE 10A
HOT IN RUN
HOT IN RUN, BULB TEST OR START
HOT IN RUN, BULB TEST OR START