ITEM REFERENCE | PROCESS MATERIAL | TORQUE | EXISTING AS PART OF

17085715	1	VALVE ASM
17086017	1	&NMB
14082491	2	BRACKET
11508145	3	BOLT/SCREW
14082490	4	SILENCER ASM
14057004	5	NUT
14023103	6	GASKET
14045849	7	ADAPTER
14084933	7	OPT
22509294	8	BOLT/SCREW

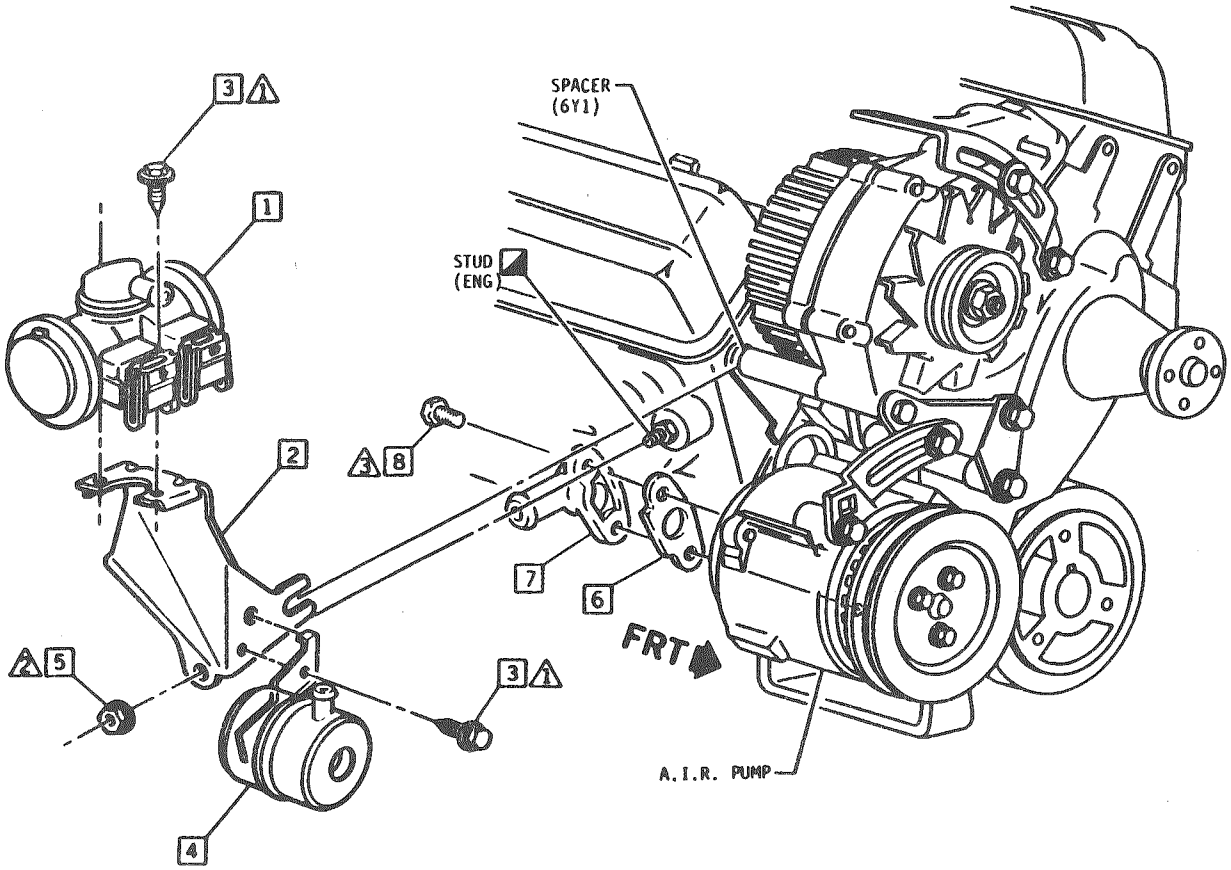

NOTICE
☐ INFORMATION NOT RELEASED
☒ AWAITING LAYOUT APPROVAL

DYNAMIC (Install) N-m	HAND (Insp.) N-m
1	4.5-7.0
2	26-40
3	9-12
4	
5	

1 FULLY DRIVEN, SEATED & NOT STRIPPED

DATE	SYM	REVISION	AUTH	DR	CK	ASM CHK	APP

DATE 01NO84
DR R. KOCH
CK J. McKeown
APPR NS
APPR
APPR
APPR

DIV CHEVROLET

REF ECA 41600
C/O 190C84

1986 F PASSENGER 14089402

TITLE A.I.R. MANAGEMENT VALVE & SILENCER
FA00 &LB9

L-32939 (NS)
L-
L-
L-

UPC 6T

SHEET C3.1

B C K O P

10001 5010 (6-84)