General Motors Corporation
CHEVROLET MOTOR DIVISION

PRODUCT DESCRIPTION MANUAL

☐ ITEM REFERENCE ◇ PROCESS MATERIAL △ TORQUE ◪ EXISTING AS PART OF

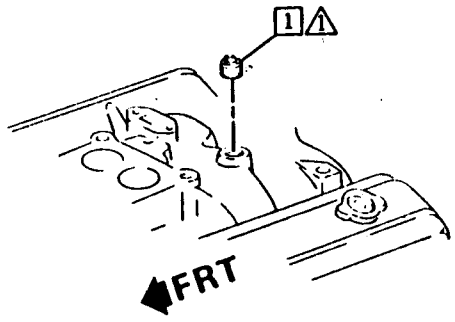

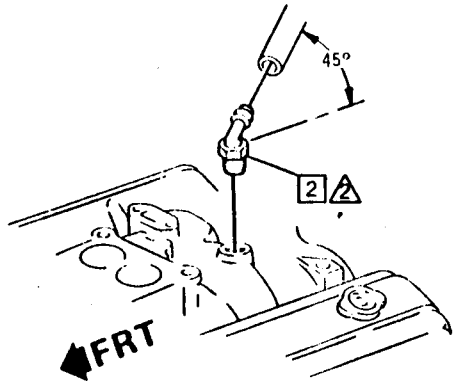

&C60 or K35

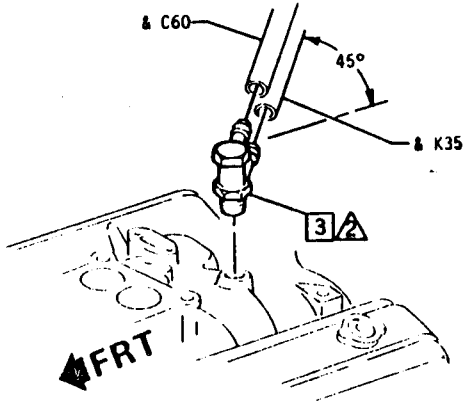

&C60 &K35

*Plus torque required to align fitting.

445673	1	PLUG	
445686	1	OPT	
14020679	2	FITTING	
(6) 14032388	3	FITTING	

NOTICE
☐ INFORMATION NOT RELEASED
☒ AWAITING LAYOUT APPROVAL

DYNAMIC (Install) N·m	HAND (Insp.) N·m
△1	11 - 14
△2	11 - *
△3	
△4	
△5	

△1 FULLY DRIVEN, SEATED & NOT STRIPPED

DATE	SYM	REVISION
JMY81	5	REDRAWN & RESIGNED 97771
30JA81	6	WAS 14043400 FITTING & DWG REV

AUTH	DR	CK	ASM ENG
27113	[illegible]	[illegible]	C
19519	CU	[illegible]	C

DATE 12FE81
DR R. HULL
CK Richard [illegible]
APPR NS
APPR
APPR
APPR

DIV CHEVROLET

1982 "F" CHEV 14036164

TITLE VACUUM FITTINGS FA00 &LG4

216

REF ECR 91284 C/O 30JA81 6L-2

L- (NS) L- L- L-

UPC 6L

SHEET C2

Ch ☒ B ☐ D ☐ P ☒ Ca ☐